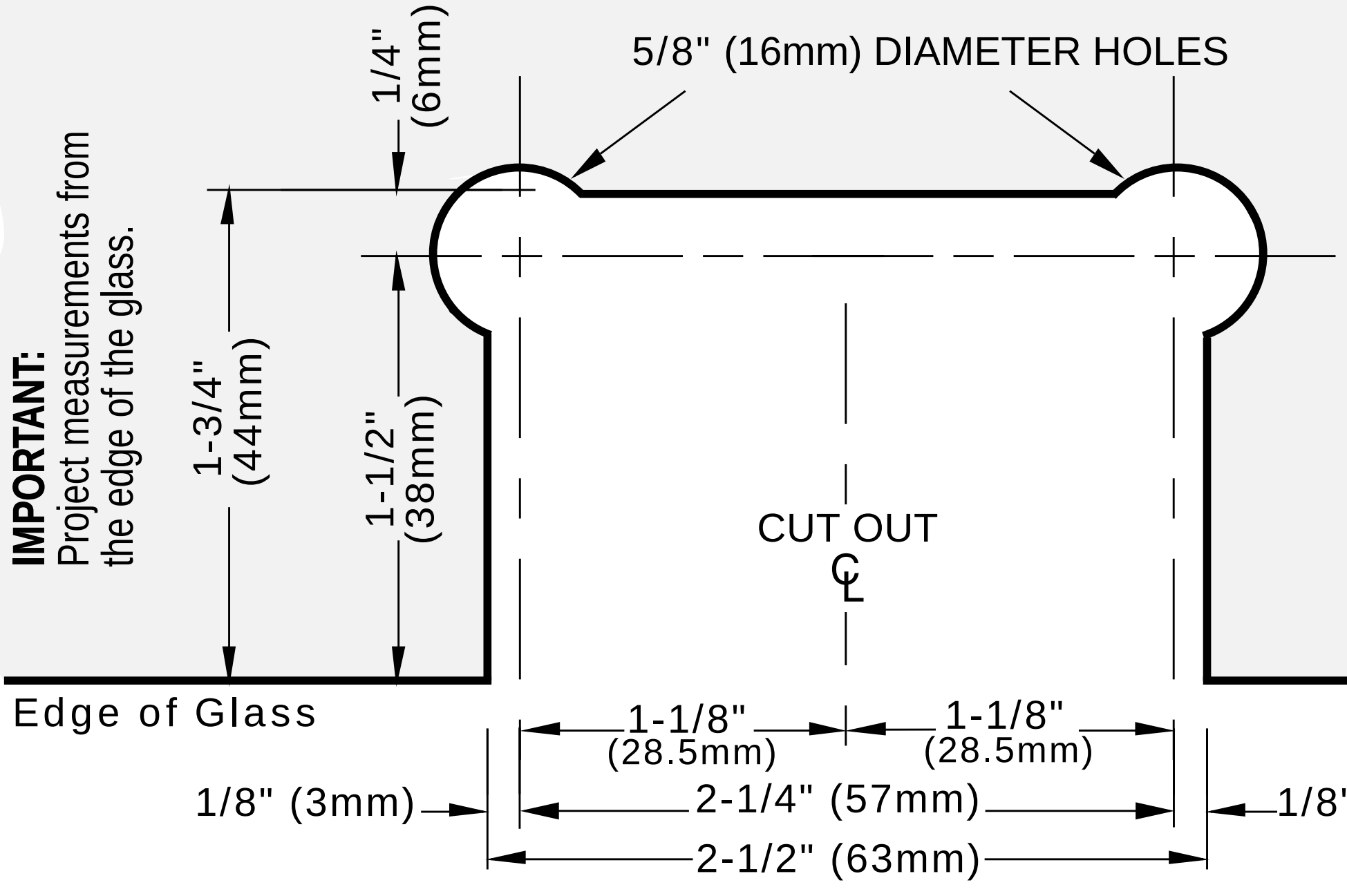

IMPORTANT:
Project measurements from the edge of the glass.